Milos modular sofa

by Jean-Marie Massaud

The Milos collection is **Vondom's first collaboration with French designer Jean-Marie Massaud.** An example of the harmonious fusion of simplicity and functionality to create an outdoor furniture that embodies elegance and comfort. Characterized by its soft curves, this collection focuses on providing comfort.
The Milos Collection was awarded the **Reddot Design Award 2024.**

Info

Description

This modular sofa combines the durability of flexible polyurethane foam with the natural beauty of iroko wood.

Its design integrates top-quality solutions and materials, especially conceived to withstand outdoor conditions without compromising warmth and comfort.

Modules

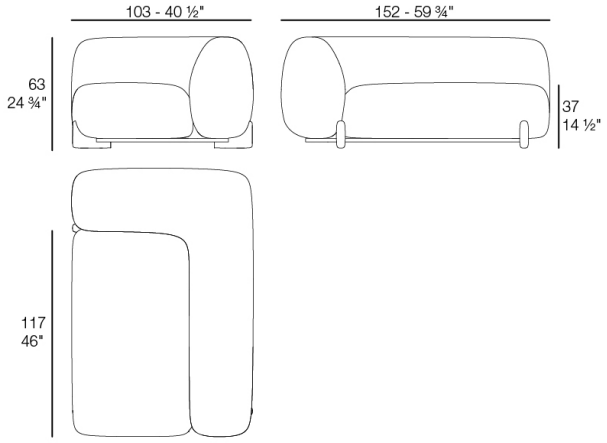

MILOS Sofá Brazo Derecho XL
MILOS Sectional Sofa Right XL
Ref. 70002

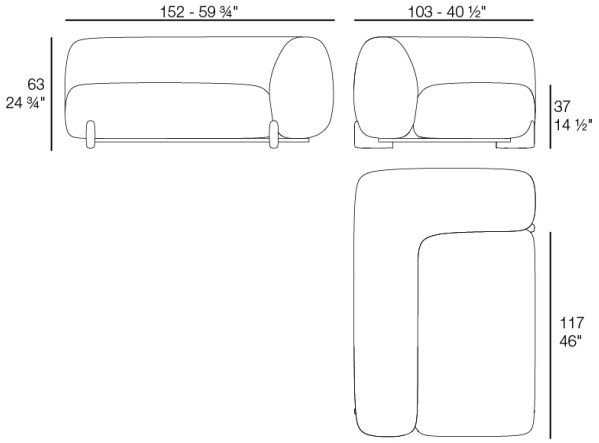

MILOS Sofá Brazo Izquierdo XL
MILOS Sectional Sofa Left XL
Ref. 70003

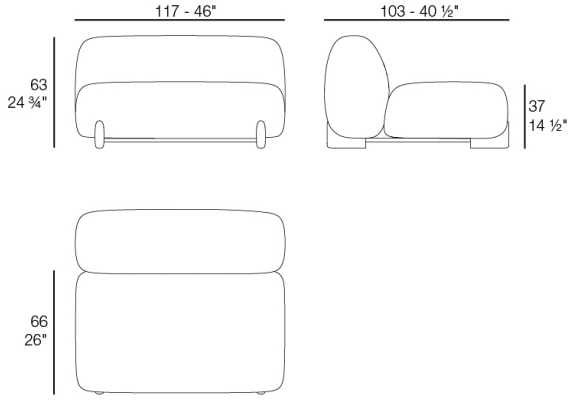

MILOS Sofá Módulo Central M
MILOS Sectional Sofa Armless M
Ref. 70004

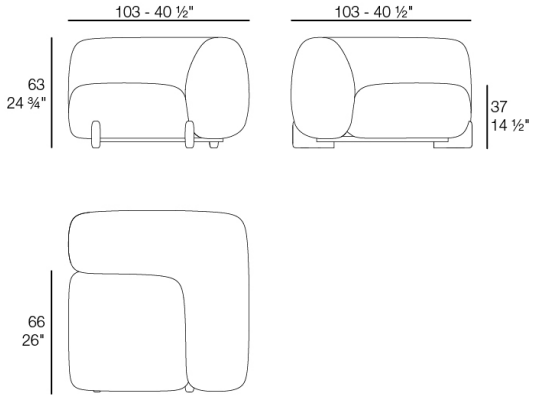

MILOS Sofá Brazo Izquierdo
MILOS Sectional Sofa Left
Ref. 70005

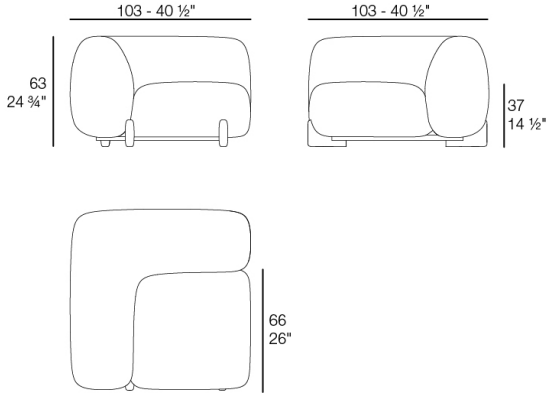

MILOS Sofá Brazo Derecho
MILOS Sectional Sofa Right
Ref. 70006

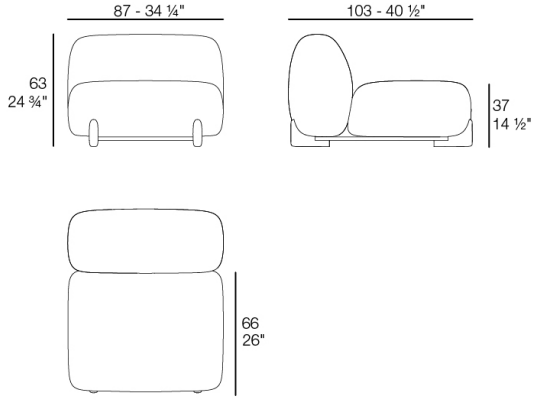

MILOS Sofá Módulo Central S
MILOS Sectional Sofa Armless S
Ref. 70007

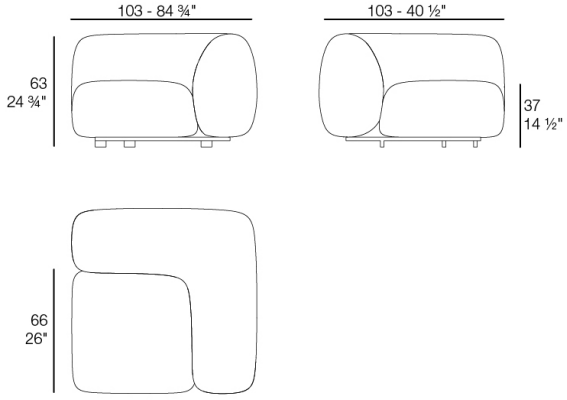

MILOS Sofá Esquina
MILOS Sectional Sofa Corner
Ref. 70008

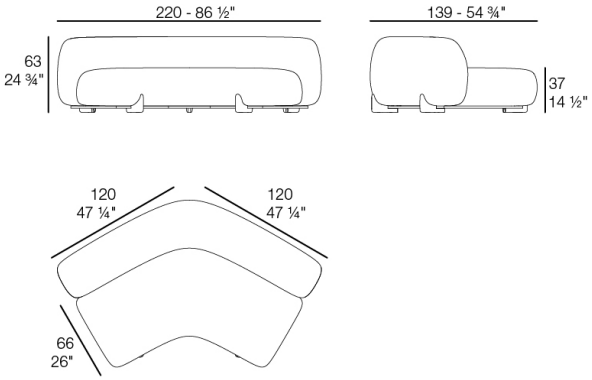

MILOS Sofá Esquina 60°
MILOS Sectional Sofa Corner 60°
Ref. 70009

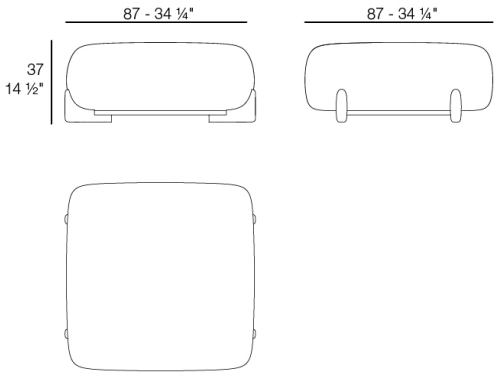

MILOS Puff-Chaise Lounge
MILOS Ottoman-Chaise Lounge
Ref. 70010

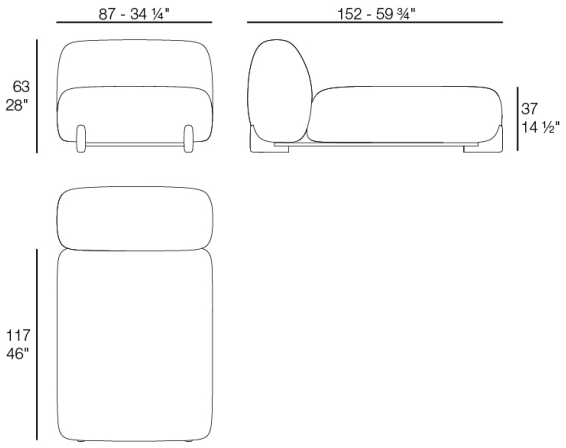

MILOS Sofá Chaise Lounge
MILOS Sectional Chaise Lounge
Ref. 70011

VONDOM

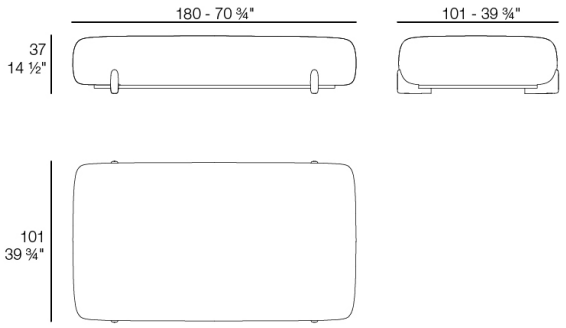

MILOS Puff XL
MILOS Puff XL
Ref. 70014

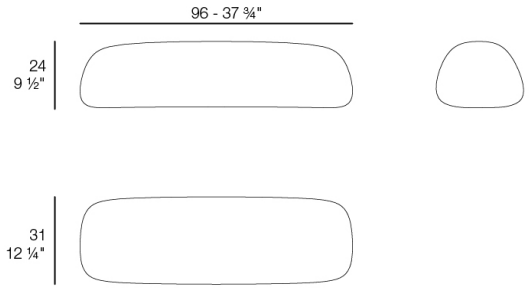

MILOS Respaldo Movible
MILOS Movable Backrest Sofa
Ref. 70014RCO

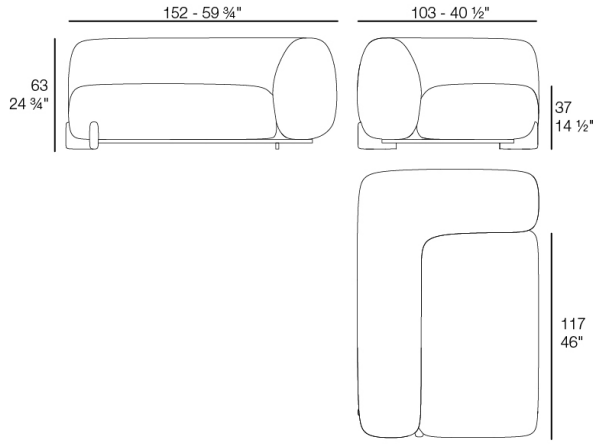

MILOS Sofá Chaiselounge Derecha
MILOS Sectional Sofa Chaiselounge Right
Ref. 70027

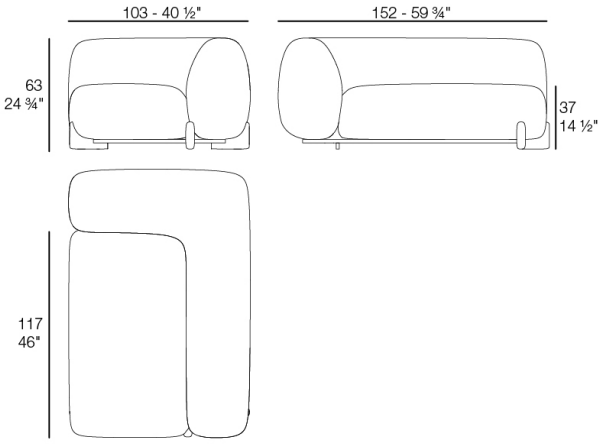

MILOS Sofá Chaiselounge Izquierda
MILOS Sectional Sofa Chaiselounge Left
Ref. 70028

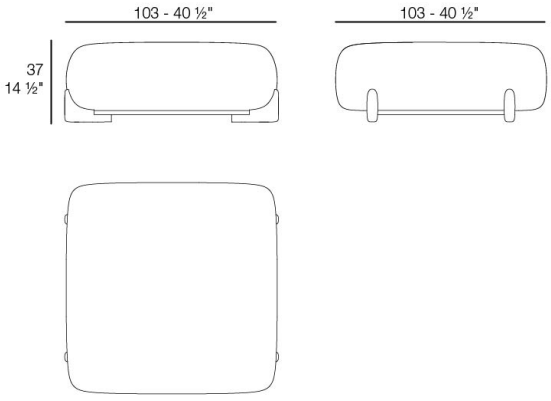

MILOS Puff M
MILOS Ottoman M
Ref. 70029

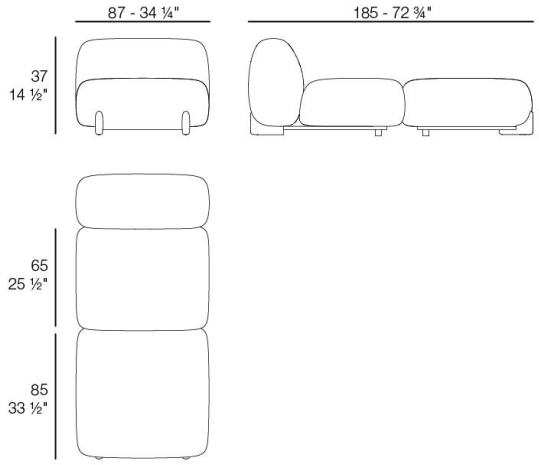

MILOS Divan
MILOS Divan
Ref. 70030

Combinations

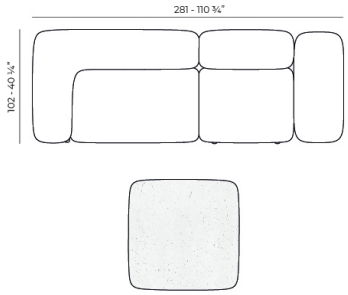

1 x 70002 Sofá Brazo Derecho XL - Sectional Sofa Right XL
1 x 70007 Sofá Módulo Central S - Sectional Sofa Armless S
1 x 70017 Mesa Centro 100 x 45 - Low Table 39 ¼ x 17 ¾"
1 x 70019 Mesa Centro 80 x 80 - Low Table 31 ½ x 31 ½"

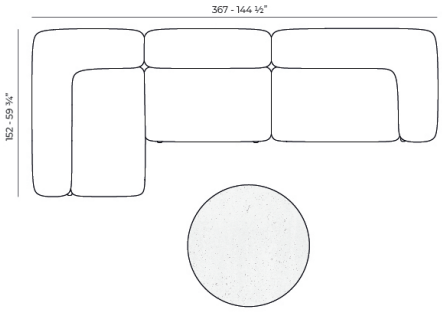

2 x 70003 Sofá Brazo Izquierdo XL - Sectional Sofa Left XL
1 x 70004 Sofá Módulo Central M - Sectional Sofa Armless M
1 x 70015 Mesa Centro D110 - Low Table D 43 ¼"

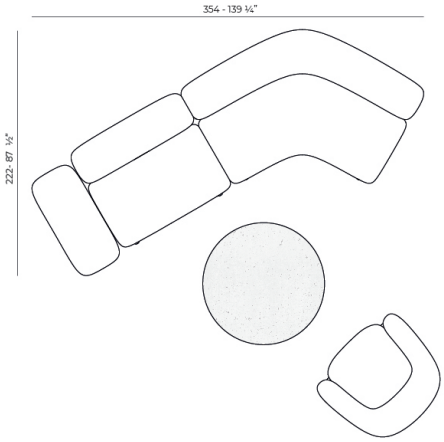

1 x 70004 Sofá Módulo Central M - Sectional Sofa Armless M
1 x 70009 Sofá Esquina 60º- Sectional Sofa Corner 60º
1 x 70026 Butaca Tapizada - Upholstered Armchair
1 x 70015 Mesa Centro D110 - Low Table D 43 ¼"

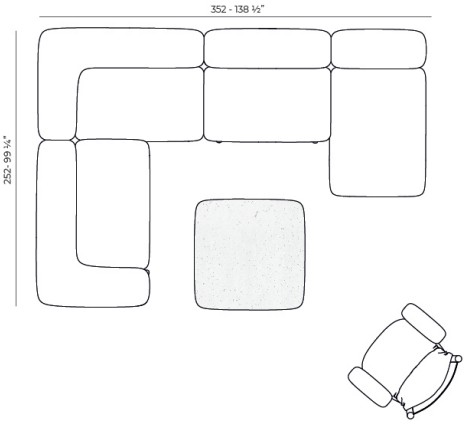

2 x 70002 Sofá Brazo Derecho XL - Sectional Sofa Right XL
1 x 70004 Sofá Módulo Central M - Sectional Sofa Armless M
1 x 70011 Sofá Chaise Lounge - Sectional Chaise Lounge
1 x 70001 Butaca Madera - Wood Armchair
1 x 70016 Mesa Centro 100 x 100 - Low Table 39 ¼ x 39 ¼"

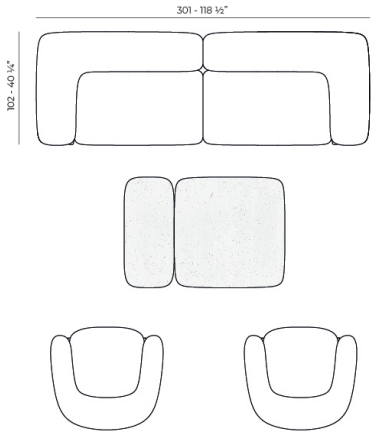

1 x 70002 Sofá Brazo Derecho XL - Sectional Sofa Right XL
1 x 70003 Sofá Brazo Izquierdo XL - Sectional Sofa Left XL
2 x 70026 Butaca Tapizada - Upholstered Armchair
1 x 70016 Mesa Centro 100 x 100 - Low Table 39 ¼ x 39 ¼"
1 x 70017 Mesa Centro 100 x 45 - Low Table 39 ¼ x 17 ¾"

Finishes

finishes

POLYURETHANE

Furniture made of flexible polyurethane injected cold. This material possesses a high resilience and durability.

fabric

GLAD

oro 1031

ocre 1051

sunset 1020

delhi 1038

lima 1030

aguacate 1028

caribe 1004

bosc 1029

artemisa 1027

oasis 1007

oceano 1005

pruna 1045

noa 1026

berry 1021

amatista 1011

vera 1019

afrodita 1013

grana 1046

bacco 1034

dahlia 1035

VONDOM

wine 1012

foc 1052

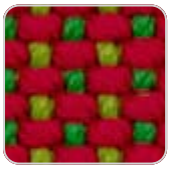
hestia 1014

turquoise 1053

niord 1015

masai 1018

ultramar 1002

aquamarina 1003

esmeralda 1016

night 1024

galan 1025

eclipse 1023

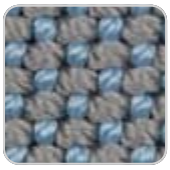
perla 1006

calipso 1017

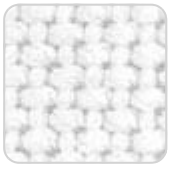
snow 1041

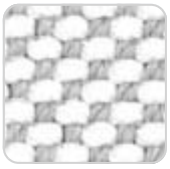
iceberg 1037

steel 1042

moon 1040

granito 1008

grey 1043

antrhacite 1044

ecru 1047

dessert 1033

taupe 1048

terra 1039

duna 1009

moka 1010

chocolate 1050

Soft and cozy fabric suitable for indoor and outdoor use.

VARM

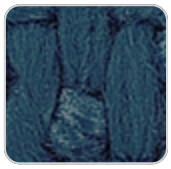

crema+blue 1063

blue jeans 1071

crema+gray 1062

tortora+crema 1070

purjai red 1069

crema+ purjai red 1061

crema 1068

crema+modo green 1060

blue+crema 1067

black+crema 1066

purjai+crema 1065

green+crema 1064

Soft and cozy fabric suitable for indoor and outdoor use.

HYGGE

blue 1083

black 1082

gray 1081

crema 1080

Soft and cozy fabric suitable for indoor and outdoor use.

KROLLET

krollet blue notte 1925

krollet purjai 1924

krollet verde 1923

krollet white 1921

krollet crema 1922

krollet black 1926

Soft and cozy fabric suitable for indoor and outdoor use.

VONDOM

Ambients